User Manual

Audio Door Intercom













Before using this product, read the Quick Guide carefully and save it for future referenceV4.0.

A01

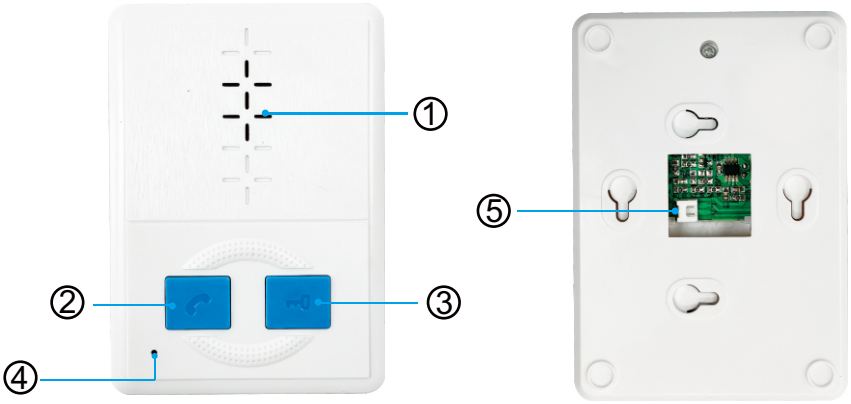

① Speaker
② Answer / Hangup
③ Unlock
④ Microphone
⑤ Connector

A02

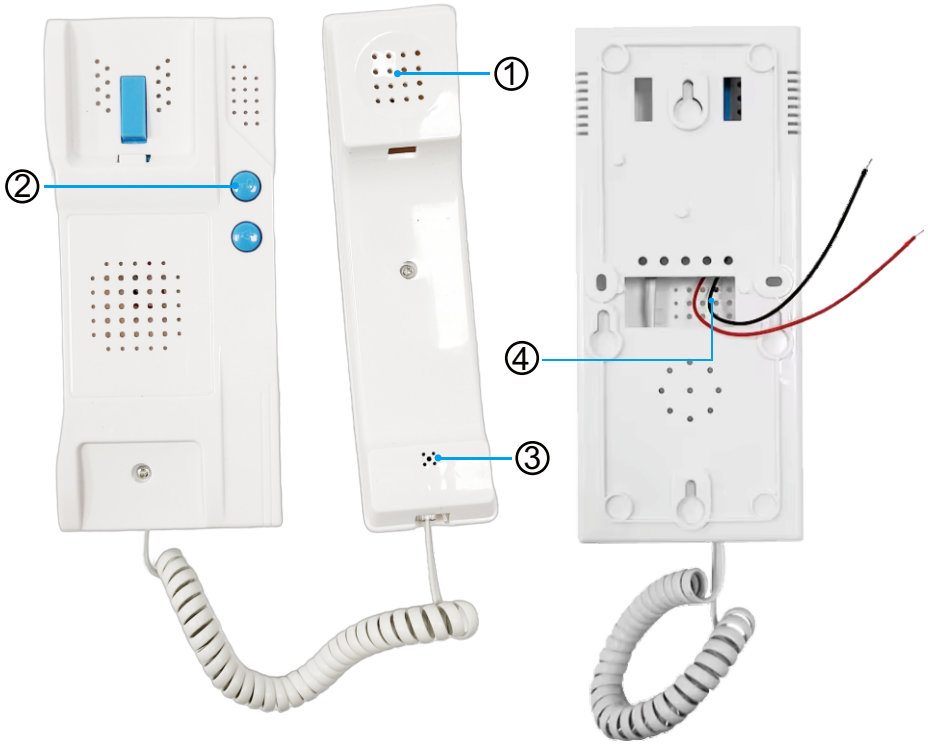

① Speaker
② Unlock
③ Microphone
④ Connector

A03

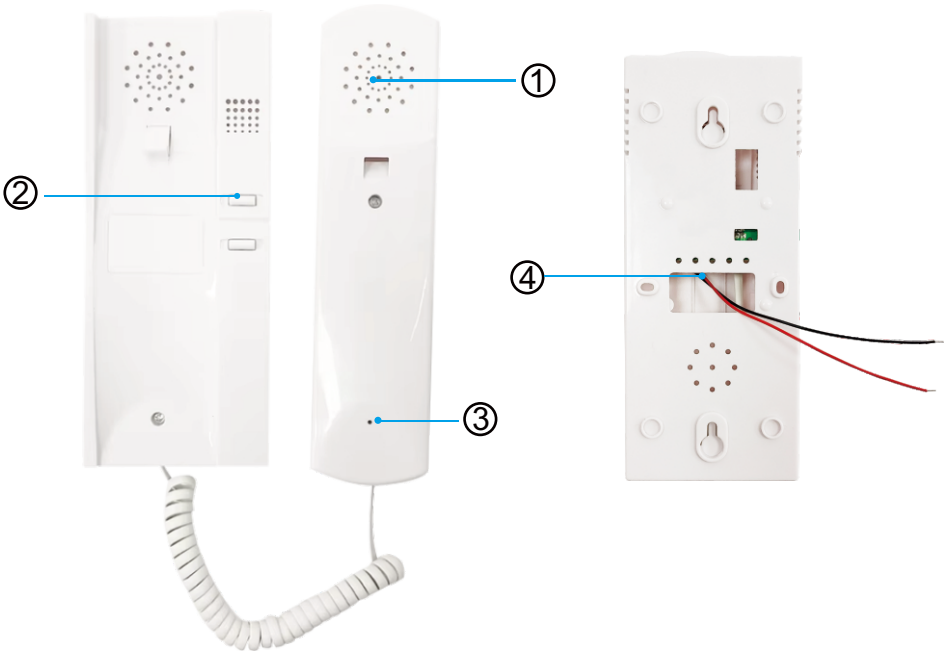

① Speaker
② Unlock
③ Microphone
④ Connector

A06

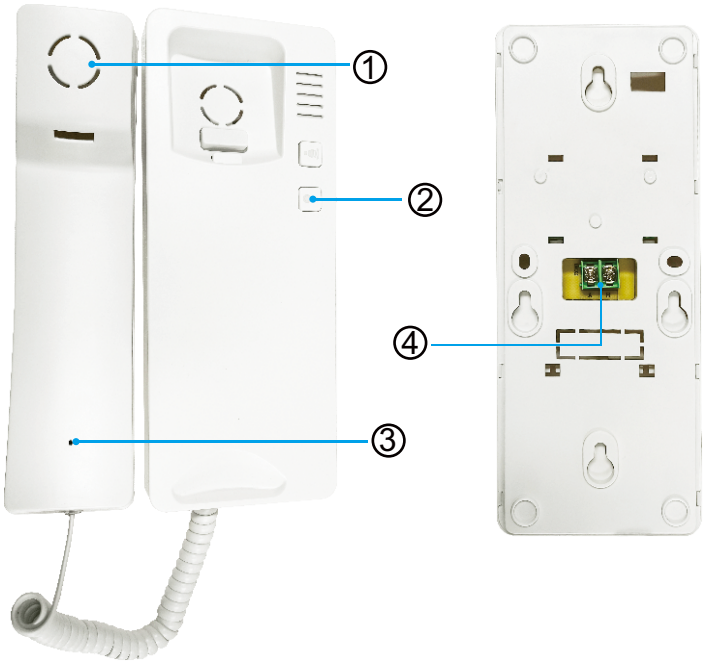

① Speaker
② Unlock
③ Microphone
④ Connector

D52

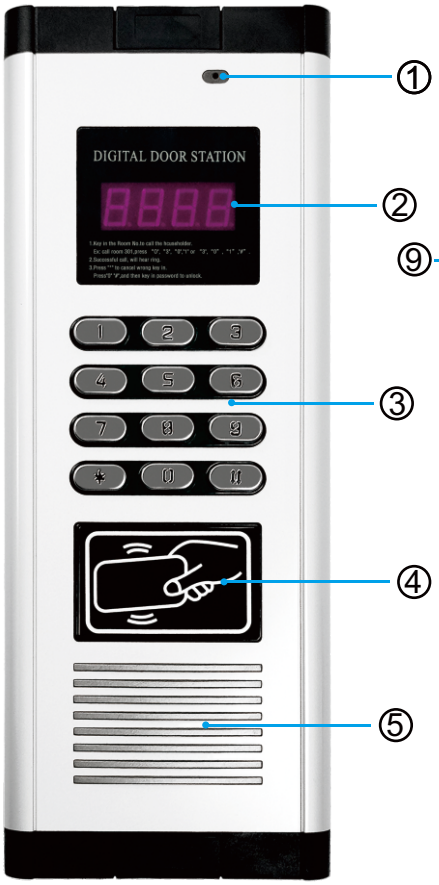

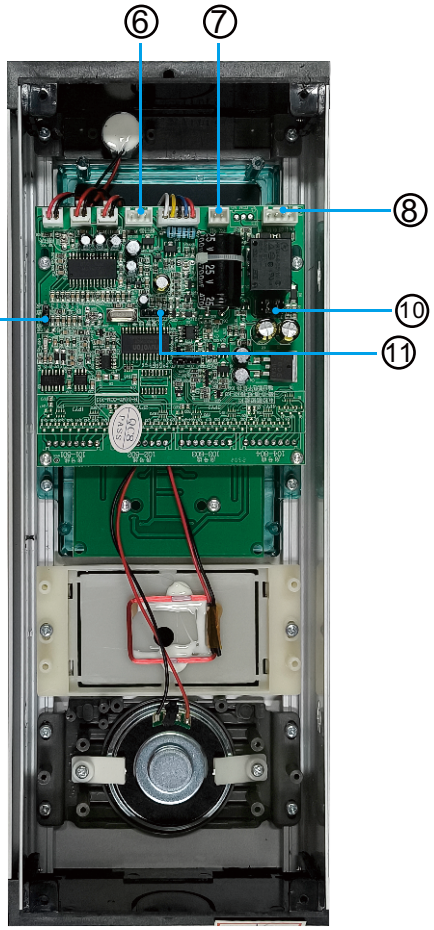

① Microphone
② LED Display
③ Buttons
④ Card Reader
⑤ Speaker
⑥ Signal: to Decoder
⑦ Unlock
⑧ Power: L+ L- GND +12V
⑨ Handset
⑩ Set Lock Type
⑪ System Settings

D22

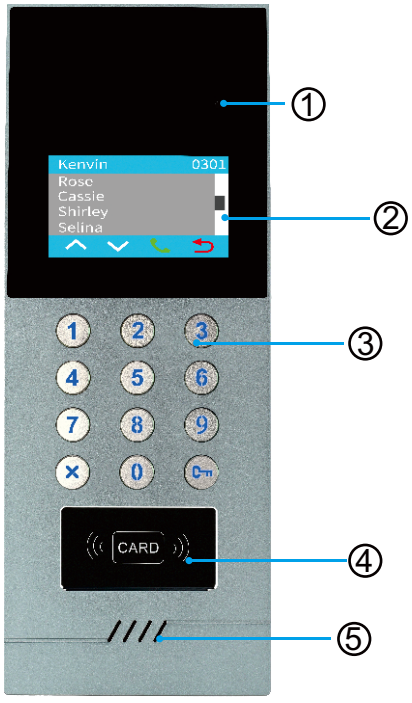



① Microphone
② 4.3 Touch Display
③ Buttons
④ Card Reader
⑤ Speaker
⑥ Power: L+ L- GND +12V
⑦ Unlock
⑧ Signal: to Decoder

Decoder

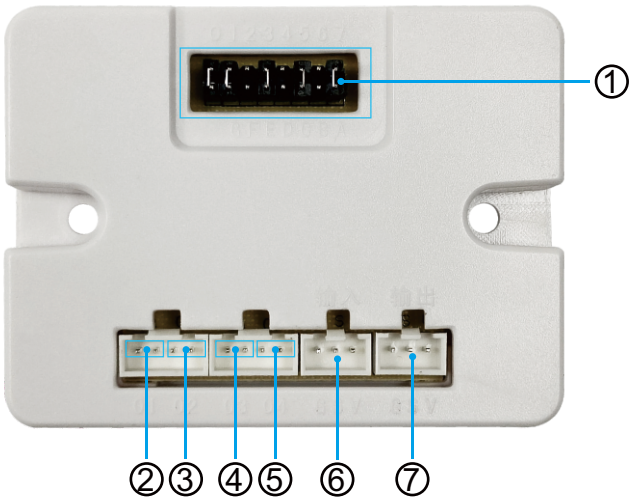

① Jumper Pins
② Output 01
③ Output 02
④ Output 03
⑤ Output 04
⑥ Signal In
⑦ Signal Out

Decoder Jump Pin Explanation:

3-16 households per floor

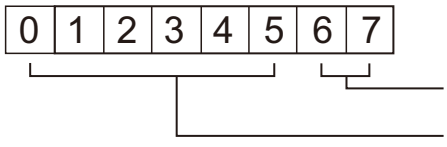

e.g. 0101-0104 Jumper in Pin 5th

Extensions number selection

Floor number selection

2 households per floor

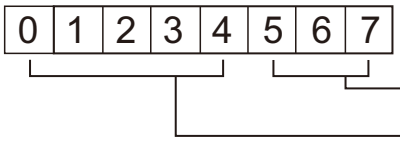

e.g. 0101-0102, 0201-0202
Jumper in Pin 4th

Extensions number selection

Floor number selection

1. Functions

1.1 The system adopts bus wiring, and a decoder must be added. The main line is a three-core line, and the household line is a two-core line without polarity distinction. The wiring is simple and the construction is convenient;
1.2 The system uses decoders, and extensions do not need to be encoded. Each extension is independent of each other in the system, does not interfere with each other, and has good confidentiality;
1.3 The maximum capacity of this system is 1024 households, with an independent password unlocking function for each household;
1.4 The system can add ID/IC card swiping to unlock. The default is ID card swiping to unlock, with a capacity of 1,000 (expandable);
1.5 When the host calls an extension, it rings for 45 seconds and the system automatically hangs up if no one answers;
1.6 The system call time is 60 seconds, and the system will automatically cut off after 60 seconds;
1.7 The system is compatible with handle-type extensions or hands-free extensions (the two cannot be mixed).
1.8 Compatible with various electric locks (electromagnetic locks or electric mortise locks must be equipped with a dedicated power supply if the unlocking delay needs to be adjusted).
Note: After completing the call on a handle-type extension, hang the extension handle firmly, otherwise it will affect the next call.

2. Instructions

2.1 Calling and unlocking:
Digital two-line system call instructions: There are "0~9" digital buttons on the host panel. Visitors can enter a three-digit or four-digit room number (such as "0203", and they can call by inputting "0203" or "203" in sequence.), if you make a mistake, you can press the "*" key to cancel and re-enter the correct room number. When the call is successful, the corresponding extension will sound a music ringtone to remind the user that a visitor is arriving. The user can pick up the phone and talk to the visitor. After the resident confirms the visitor's identity, he can press the "unlock key" to remotely open the electric lock of the downstairs door.

2.2 Password unlocking instructions:
The unlocking password is a 4-digit room number + a 4-digit password. If the room number is less than 4 digits, add "0" in front. For example, when the user's extension number is "203" and the password set for the extension is "8888", the unlocking password is "02038888". When you want to use the password to unlock the lock, you only need to enter #02038888 on the host. The lock will open and it will automatically exit if the password is incorrect.
Public unlocking enter “0#” + 6-digit password, for example, the public unlocking password is “123456”, then input “0#123456” in the outdoor unit to open the lock.

3. Room Settings

The setting of the room number in this system is closely related to the decoder address code. Before programming the room number, it is necessary to understand the distribution of the floors and the usage of the decoder. For example, there are 4 households on one floor, and one decoder is equipped on the first floor; or there are 10 households on the first floor, and 3 decoders are equipped on the first floor; or there are 2 households on the first floor, and one decoder is equipped on the two floors; the floors and number of households meet the standards, The room number can be set directly by setting the decoder address code jumper pins (pins 1, 2, 3, 4, 5, 6, and 7).

3.1 Each Floor is equipped with one or more decoders:

When each floor is equipped with one or more decoders, the meaning of the decoder jump pins is as follows:



In the standby state, input the command of #0000200316 in the host, and the host enters the standard room number coding state of 1 ~ 16 households on each floor. The decoder floor number coding table is as follows:

Jumper	0	1	2	3	4	5	Jumper	0	1	2	3	4	5	Jumper	0	1	2	3	4	5	Jumper	0	1	2	3	4	5	Jumper	0	1	2	3	4	5
F0							F14			★	★	★		F28		★	★	★			F42	★		★		★		F56	★	★	★			
F1						★	F15			★	★	★	★	F29		★	★	★		★	F43	★		★		★	★	F57	★	★	★			★
F2					★		F16		★					F30		★	★	★	★		F44	★		★	★			F58	★	★	★		★	
F3					★	★	F17		★				★	F31		★	★	★	★	★	F45	★		★	★		★	F59	★	★	★		★	★
F4				★			F18		★			★		F32	★						F46	★		★	★	★		F60	★	★	★	★		
F5				★		★	F19		★			★	★	F33	★					★	F47	★		★	★	★	★	F61	★	★	★	★		★
F6				★	★		F20		★		★			F34	★				★		F48	★	★					F62	★	★	★	★	★	
F7				★	★	★	F21		★		★		★	F35	★				★	★	F49	★	★				★	F63	★	★	★	★	★	★
F8			★				F22		★		★	★		F36	★			★			F50	★				★								
F9			★			★	F23		★		★	★	★	F37	★			★		★	F51	★	★			★	★							
F10			★		★		F24		★	★				F38	★			★	★		F52	★	★		★									
F11			★		★	★	F25		★	★			★	F39	★			★	★	★	F53	★	★		★		★							
F12			★	★			F26		★	★		★		F40	★		★				F54	★	★		★	★								
F13			★	★		★	F27		★	★		★	★	F41	★		★			★	F55	★	★		★	★	★							

Note: An asterisk indicates that the pin is short-circuited.

The room number table for 1-16 households on each floor is as follows:

Jumper 6	Jumper 7	Decoder Output 1	Decoder Output 2	Decoder Output 3	Decoder Output 4
		01	02	03	04
	★	05	06	07	08
★		09	10	11	12
★	★	13	14	15	16

3.2 Every 2 floors share one decoder

Every 2 floors use one decoder, the meaning of the decoder jumper pins are as follows:

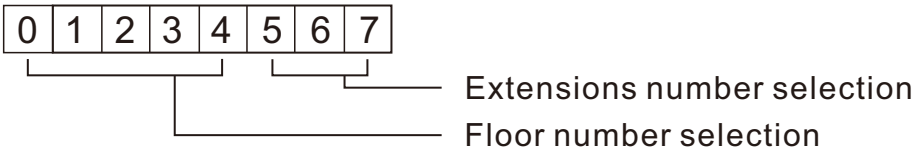

In the standby state, input the command of #0000200302 in the host, and the host enters the standard room number encoding state where the two floors share a decoder. The decoder floor number coding table is as follows:

Jumper	0	1	2	3	4	Jumper	0	1	2	3	4
F0						F15-F16		★			
F1-F2					★	F17-F18		★			★
F3-F4				★		F19-F20		★		★	
F5-F6				★	★	F21-F22		★		★	★
F7-F8			★			F23-F24		★	★		
F9-F10			★		★	F25-F26		★	★		★
F11-F12			★	★		F27-F28		★	★	★	
F13-F14			★	★	★	F29-F30		★	★	★	★

Note: An asterisk indicates that the pin is short-circuited.

The room number coding table that shares one decoder for every 2 floors is as follows:

Jumper 5	Jumper 6	Jumper 7	Output 01	Output 02	Output 03	Output 04
			0101	0102	0201	0202
		★	0103	0104	0203	0204
	★		0105	0106	0205	0206
	★	★	0107	0108	0207	0208
★			0109	0110	0209	0210
★		★	0111	0112	0211	0212
★	★		0113	0114	0213	0214
★	★	★	0115	0116	0215	0216

Note 1: The room number in this table is fixed to floors 1-2. If it is other floors, the first two floor numbers in the room number will change as the floor changes;

Note 2: For this encoding mode, the decoder must be shared from odd-numbered floors to even-numbered floors, such as the 1st and 2nd floors, the 3rd and 4th floors, etc. The 2nd and 3rd floors, or the 4th and 5th floors cannot be shared.

3.3 Room Number 2 Digits Settings

In standby mode, enter #00002025. The current room number will be displayed. Then enter 12 to set it to a 2-digit room number mode.

Decoder jumper set and output is as following:

									The room number corresponding to the output port			
Jumper / Decoder	0	1	2	3	4	5	6	7	Output 1	Output 2	Output 3	Output 4
1								★	01	02	03	04
2							★		05	06	07	08
3							★	★	09	10	11	12
4						★			13	14	15	16
5						★		★	17	18	19	20
6						★	★		21	22	23	24
7						★	★	★	25	26	27	28
8					★				29	30	31	32
9					★			★	33	34	35	36
10					★		★		37	38	39	40
11					★		★	★	41	42	43	44
12					★	★			45	46	47	48
13					★	★		★	49	50	51	52
14					★	★	★		53	54	55	56
15					★	★	★	★	57	58	59	60
16				★					61	62	63	64
17				★				★	65	66	67	68
18				★			★		69	70	71	72
19				★			★	★	73	74	75	76
20				★		★			77	78	79	80
21				★		★		★	81	82	83	84
22				★		★	★		85	86	87	88
23				★		★	★	★	89	90	91	92
24				★	★				93	94	95	96
25				★	★			★	97	98	99	

4. System Diagram

Wiring requirements: Main line: below 10 floors, use RVV3*0.5MM sheathed wire;
Below 20 floors, use RVV3*0.75MM sheathed wire;
Below 36 floors, use RVV3*1.0MM sheathed wire;

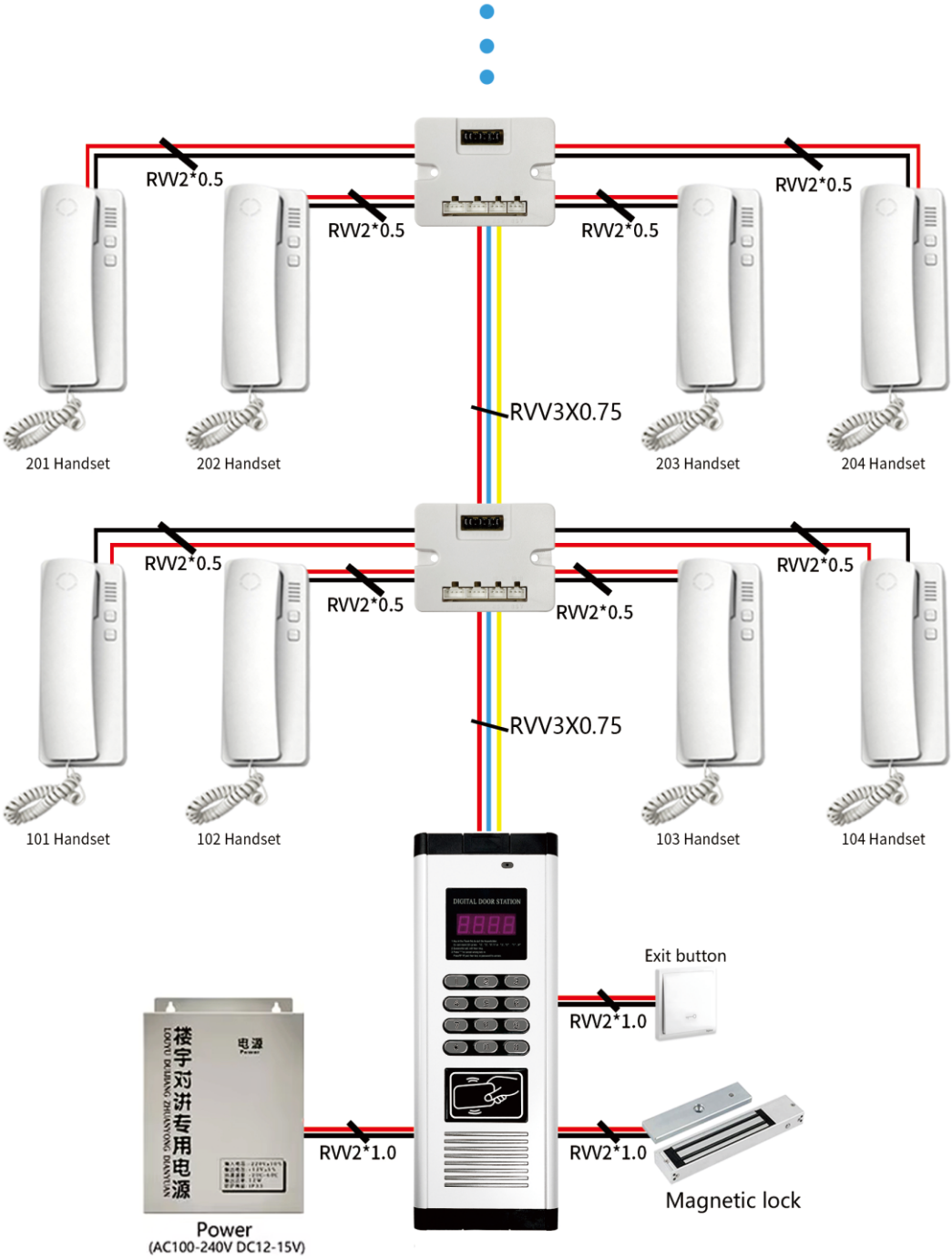

System Wiring Schematic Diagram

4. System Diagram

Wiring requirements: Main line: below 10 floors, use RVV3*0.5MM sheathed wire;
Below 20 floors, use RVV3*0.75MM sheathed wire;
Below 36 floors, use RVV3*1.0MM sheathed wire;

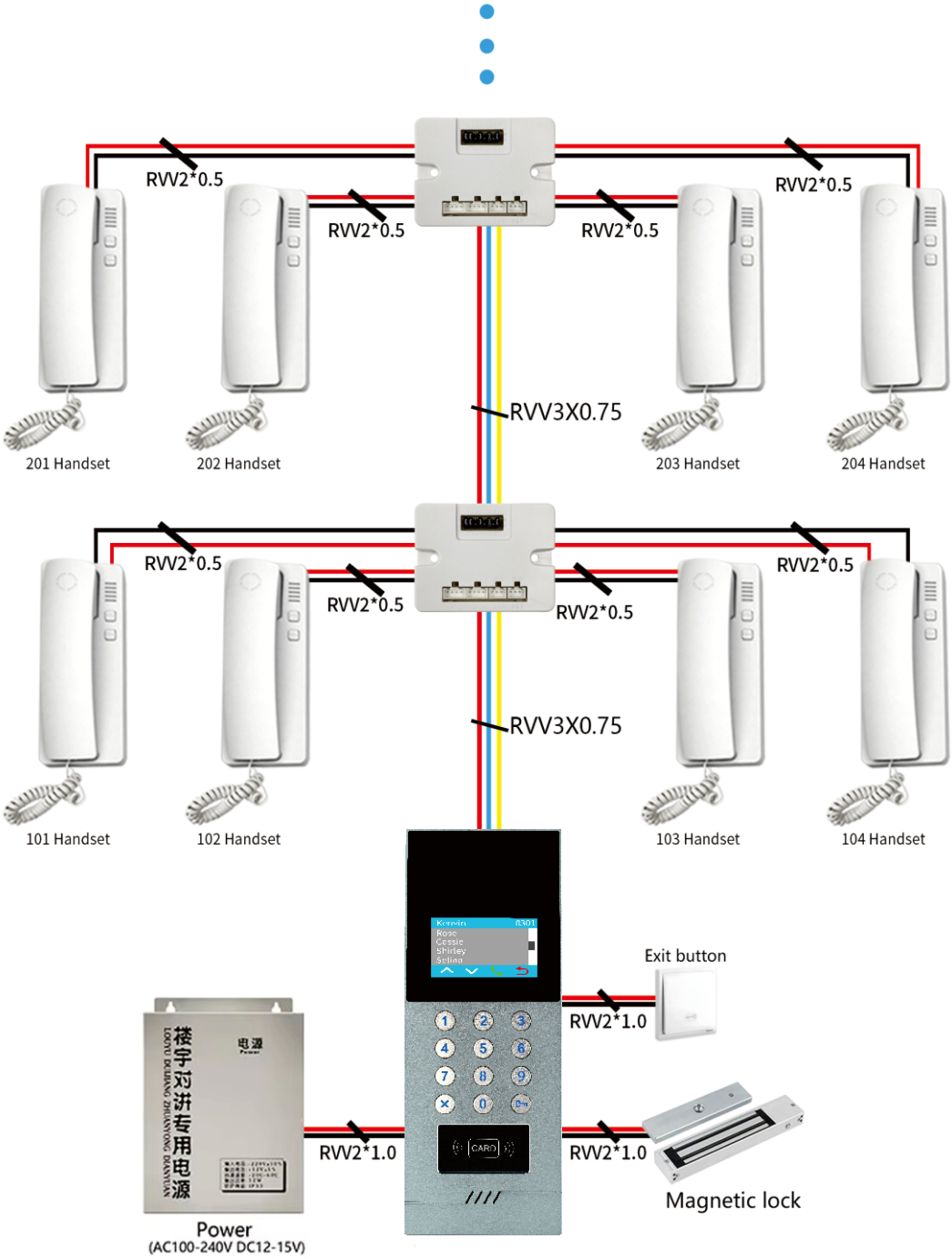

System Wiring Schematic Diagram

4. System Diagram

Wiring requirements: Main line: below 10 floors, use RVV3*0.5MM sheathed wire;
Below 20 floors, use RVV3*0.75MM sheathed wire;
Below 36 floors, use RVV3*1.0MM sheathed wire;

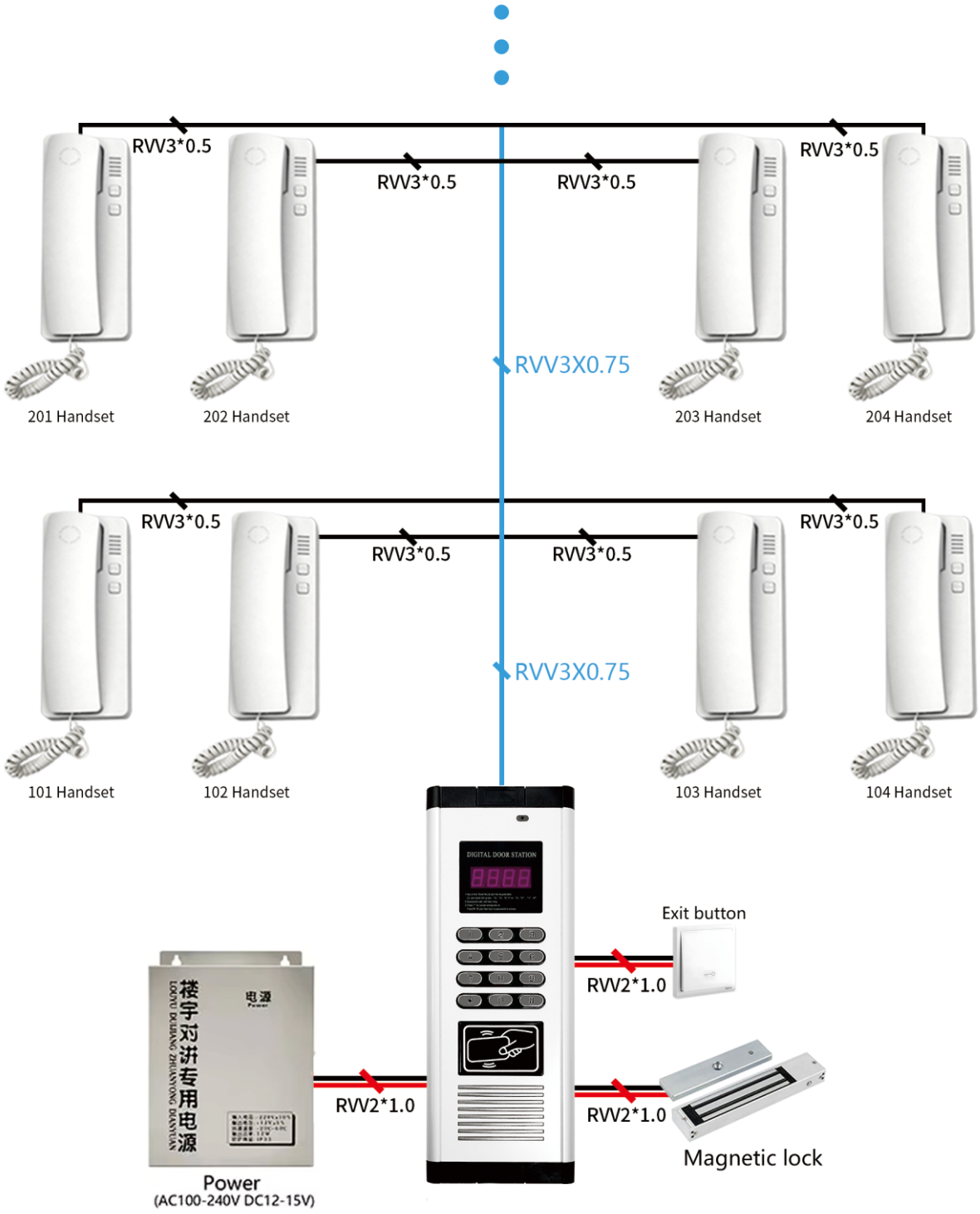

System Wiring Schematic Diagram
3-wire indoor unit build-in decoder

4. System Diagram

Wiring requirements: Main line: below 10 floors, use RVV3*0.5MM sheathed wire;
Below 20 floors, use RVV3*0.75MM sheathed wire;
Below 36 floors, use RVV3*1.0MM sheathed wire;

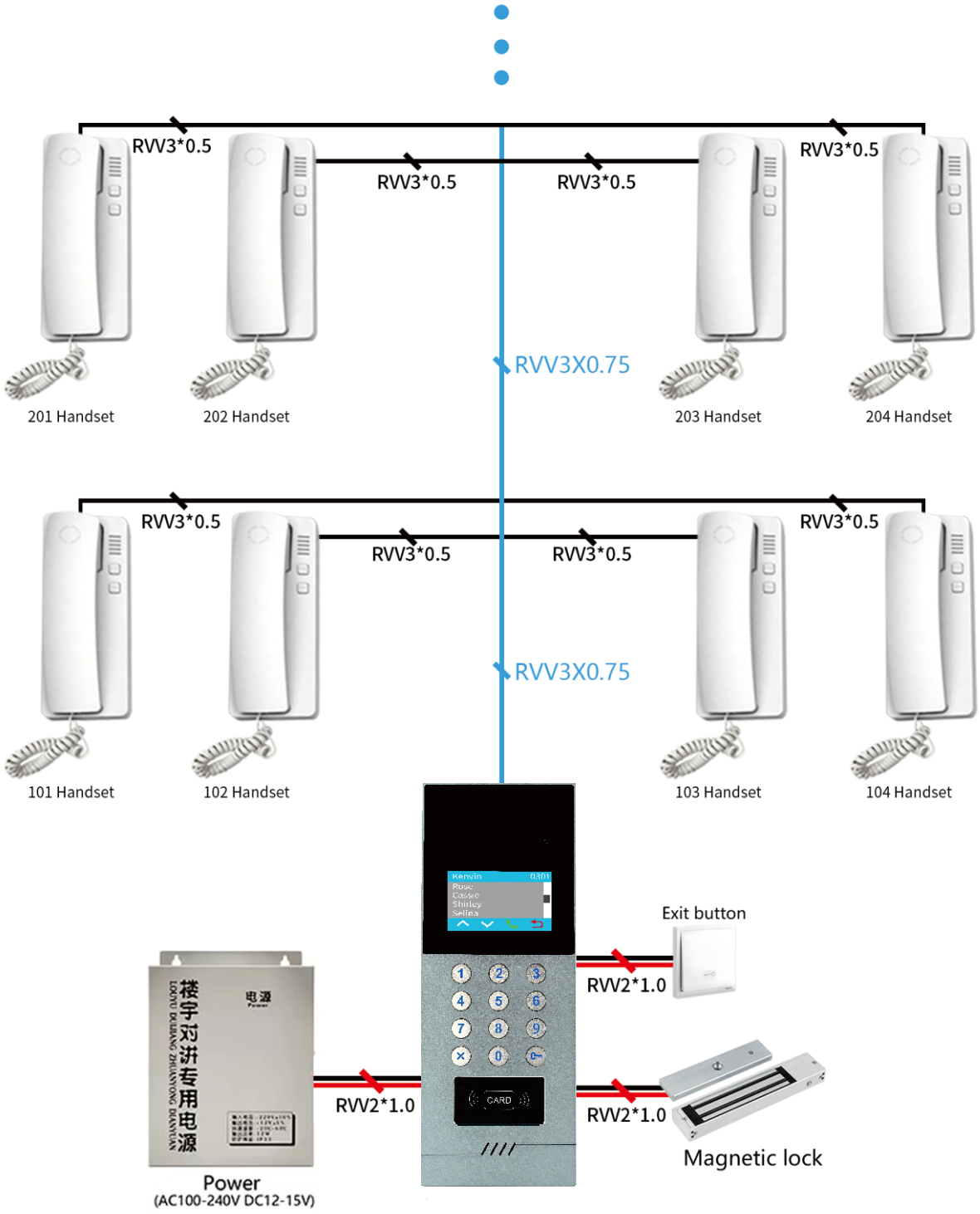

System Wiring Schematic Diagram
3-wire indoor unit build-in decoder

Connection without decoder: Connect one line of the indoor unit to the room number line, and the other line to the S port of VSG output. This connection method can connect up to 32 indoor units.

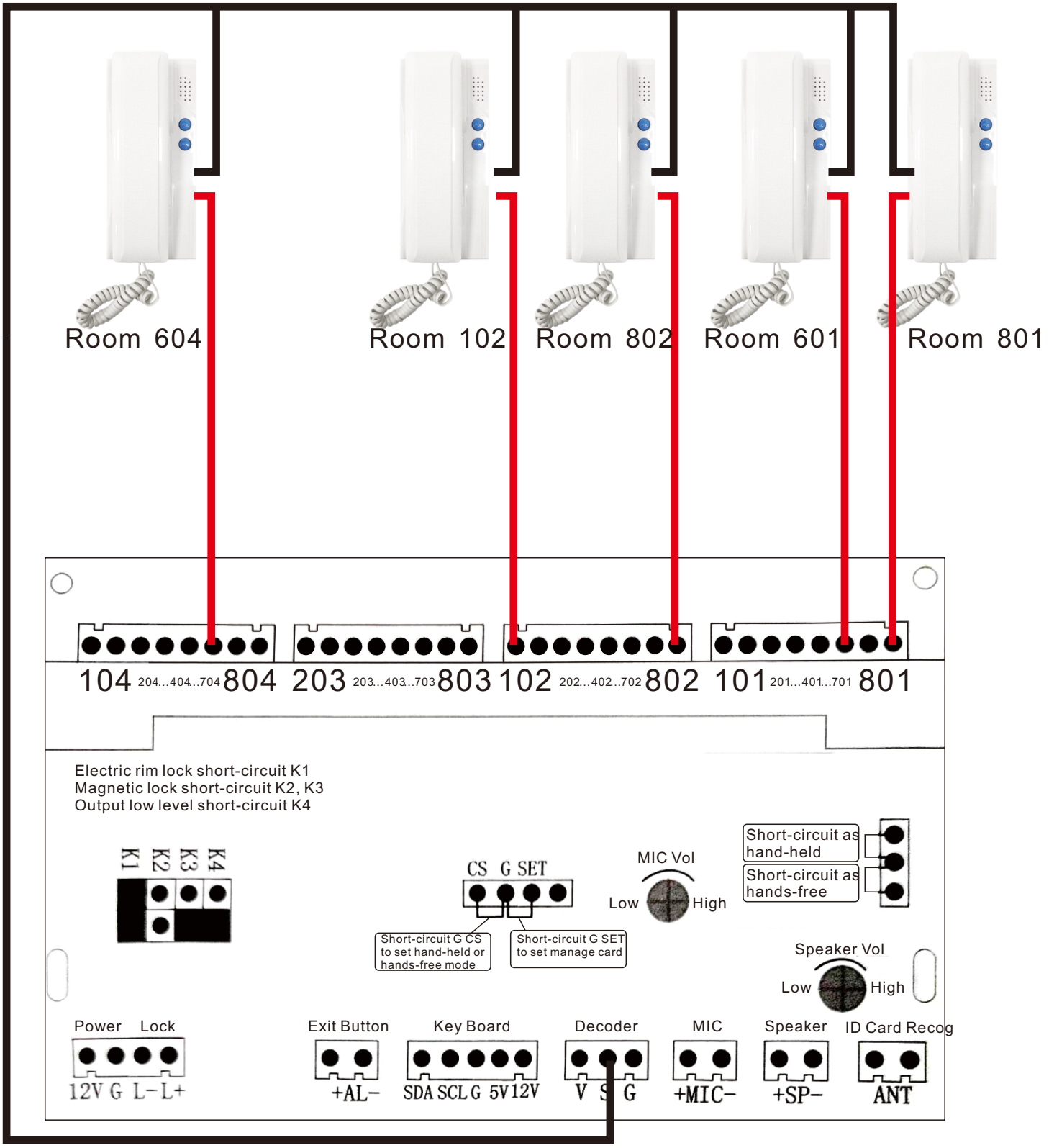

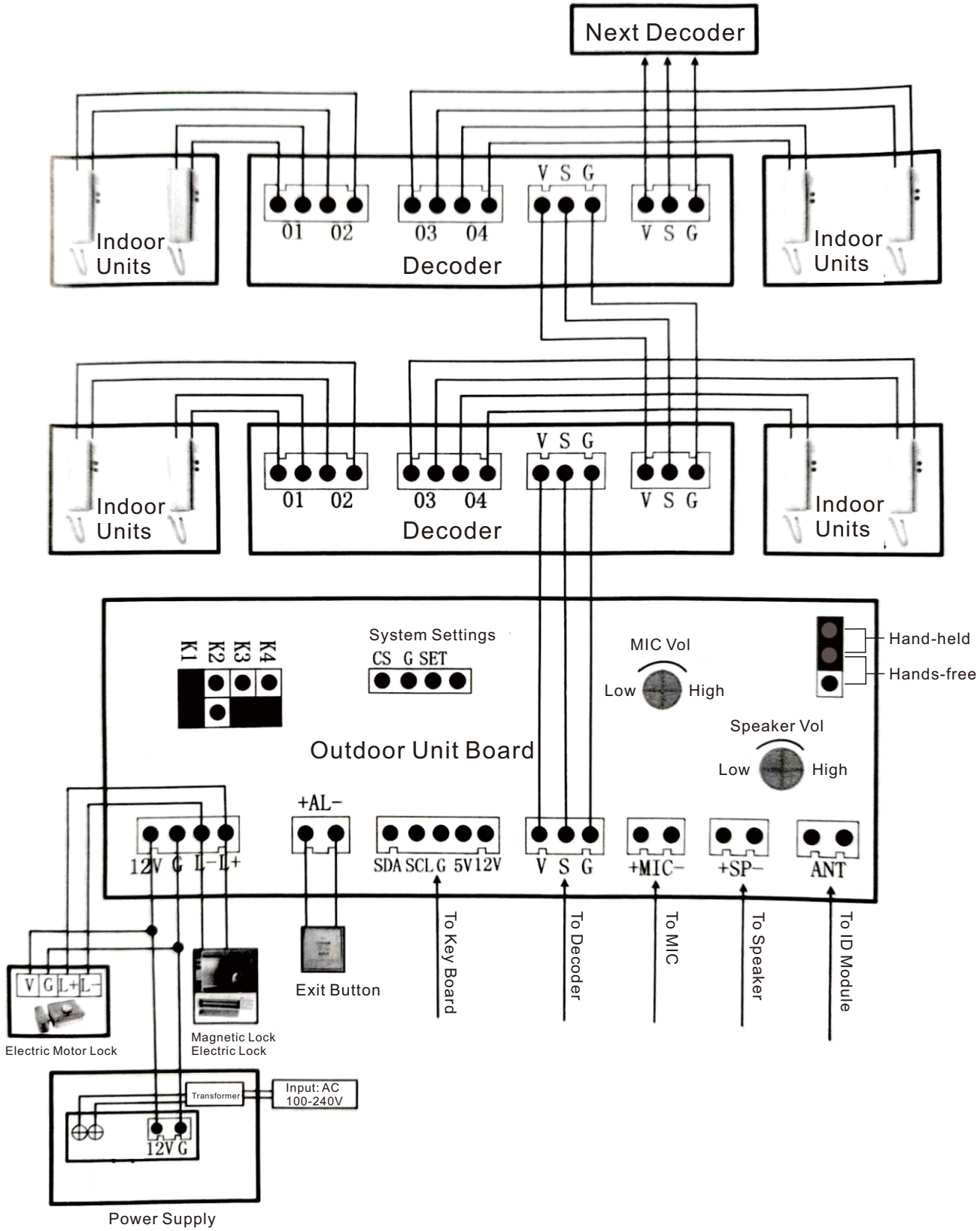

System Detailed Wiring Diagram

5.Operations

For D52:

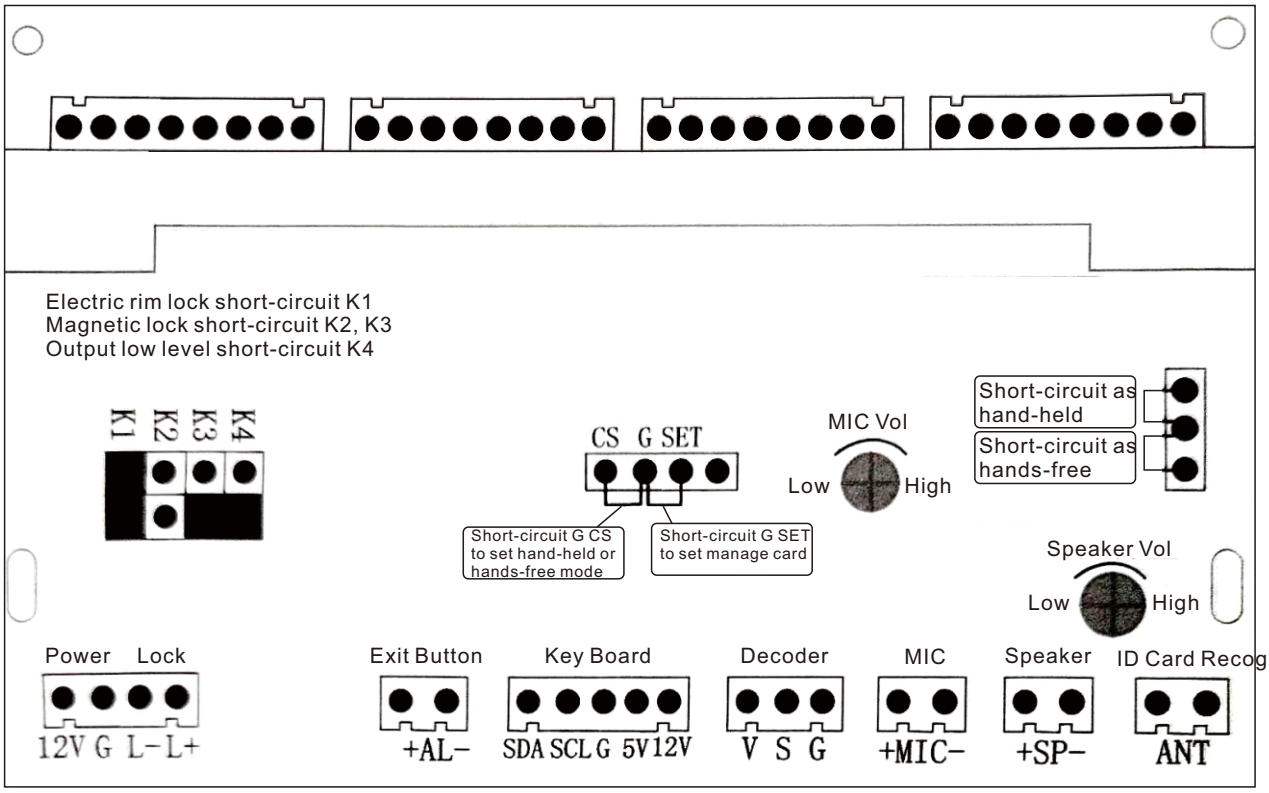

5.1 Handy or Hands-free Indoor Unit Mode Settings

Non-visual analog hosts cannot mix hands-free and handsets.

Setting 1: Enter "#00005737" to switch between handheld or hands-free modes; 3 beeps for handheld mode, 8 beeps for hands-free mode.

Setting 2: When the power is off, short-circuit the "CS" and "G" ports on the circuit board, then power on; 3 beeps for handheld mode, 8 beeps for hands-free mode. Also, ensure the jumper is inserted into the corresponding pins.

5.2 Unlock Signal Settings

The K1-K4 pins on the motherboard are used to set the unlock signal.
The factory default is to connect to an ordinary electric lock (short-circuit K1).
If you use a magnetic lock, you need to short-circuit K2 and K3.
If you need to output a low-level signal, short-circuit K4.

5.3 Unlock Password

Public password setting: When the power is off, short-circuit the "G" and "SET" pins with a jumper. After two beeps upon powering up, remove the jumper. Then input "0#" followed by a 6-digit password on the host, such as "0#123456". To unlock, input "0#123456".

Personal unlock password setting: call your own indoor unit on the outdoor station, pick up the phone after ringing, long press the "unlock" button of the indoor unit for 4s, the outdoor unit digital tube will display "PASS". At this time, enter the 4-digit password on the outdoor unit and it will automatically save the password. if you need to change your password, you only need to reset it once.

Enter "#000020049999" to delete all unlock passwords.

5.Operations

5.3 Unlock Password

Public password setting: When the power is off, short-circuit the "G" and "SET" pins with a jumper. After two beeps upon powering up, remove the jumper. Then input "0#" followed by a 6-digit password on the host, such as "0#123456". To unlock, input "0#123456".

Personal unlock password setting: call your own indoor unit on the outdoor station, pick up the phone after ringing, long press the "unlock" button of the indoor unit for 4s, the outdoor unit digital tube will display "PASS". At this time, enter the 4-digit password on the outdoor unit and it will automatically save the password. if you need to change your password, you only need to reset it once.

Enter "#000020049999" to delete all unlock passwords.

5.4 ID Card Management

1. Add new ID cards: Swipe the add card. After 2 beeps, enter the add mode. Then swipe the ID card to be registered in sequence, and finally swipe the add card again.

2. Delete ID cards: Swipe the delete card. After 3 beeps, enter the delete mode. Then swipe the ID card to be deleted in sequence, and finally swipe the delete card again.

3. Delete all ID cards: Place the delete card in the card swiping area for 10s. It will be cleared after 5 consecutive beeps.

4. Delete by card number: Back up the card numbers and save them. If the card is lost, you can delete the card based on the card number. Enter #20132004 on the outdoor unit to display "CArd" and then enter the card number to be deleted. You can enter multiple card numbers continuously. Press “*” to exit after completion.

5.Operations

For D22:

1.Set the number of digits in the room number you are calling: Press **00002025**, and enter **12**, **13**, and **14** to set the number of digits in the current dialed room number to 2, 3, or 4 digits respectively.

To set Ringtone, enter 01 - 07 to choose.
01: Alarm Ringtone
02: Notification Tone 1
03: Westminster Chime
04: Ding-Dong Ringtone
05: Notification Tone 2
06: Christmas Song
07: Birds Chirping Ringtone

The 3- or 4-digit room number decoder settings are as follows:

Jumper	0	1	2	3	4	5	Jumper	0	1	2	3	4	5	Jumper	0	1	2	3	4	5	Jumper	0	1	2	3	4	5	Jumper	0	1	2	3	4	5
F0							F14			★	★	★		F28		★	★	★			F42	★		★		★		F56	★	★	★			
F1						★	F15			★	★	★	★	F29		★	★	★		★	F43	★		★		★	★	F57	★	★	★			★
F2					★		F16		★					F30		★	★	★	★		F44	★		★	★			F58	★	★	★		★	
F3					★	★	F17		★				★	F31		★	★	★	★	★	F45	★		★	★		★	F59	★	★	★		★	★
F4				★			F18		★			★		F32	★						F46	★		★	★	★		F60	★	★	★	★		
F5				★		★	F19		★			★	★	F33	★					★	F47	★		★	★	★	★	F61	★	★	★	★		★
F6				★	★		F20		★		★			F34	★				★		F48	★	★					F62	★	★	★	★	★	
F7				★	★	★	F21		★		★		★	F35	★				★	★	F49	★	★				★	F63	★	★	★	★	★	★
F8			★				F22		★		★	★		F36	★			★			F50	★				★								
F9			★			★	F23		★		★	★	★	F37	★			★		★	F51	★	★			★	★							
F10			★		★		F24		★	★				F38	★			★	★		F52	★	★		★									
F11			★		★	★	F25		★	★			★	F39	★			★	★	★	F53	★	★		★		★							
F12			★	★			F26		★	★		★		F40	★		★				F54	★	★		★	★								
F13			★	★		★	F27		★	★		★	★	F41	★		★			★	F55	★	★		★	★	★							

Jumper 6	Jumper 7	Output 01	Output 02	Output 03	Output 04
		01	02	03	04
	★	05	06	07	08
★		09	10	11	12
★	★	13	14	15	16

For example: if the 4th pin is short-circuited, the room numbers of the four ports of the decoder are201, 202, 203, and 204 respectively; if the 5th, 4th, and 7th pins are short-circuited, the room numbers of the four ports of the decoder are 305, 306, 307, and 308 respectively;

The 2-digit room number decoder settings are as follows:

For example: if the 4th pin is short-circuited, the room numbers of the four ports of the decoder are 29, 30, 31, and 32 respectively;

5.Operations

Jumper / Decoder	0	1	2	3	4	5	6	7	The room number corresponding to the output port			
									Output 1	Output 2	Output 3	Output 4
1								★	01	02	03	04
2							★		05	06	07	08
3							★	★	09	10	11	12
4						★			13	14	15	16
5						★		★	17	18	19	20
6						★	★		21	22	23	24
7						★	★	★	25	26	27	28
8					★				29	30	31	32
9					★			★	33	34	35	36
10					★		★		37	38	39	40
11					★		★	★	41	42	43	44
12					★	★			45	46	47	48
13					★	★		★	49	50	51	52
14					★	★	★		53	54	55	56
15					★	★	★	★	57	58	59	60
16				★					61	62	63	64
17				★				★	65	66	67	68
18				★			★		69	70	71	72
19				★			★	★	73	74	75	76
20				★		★			77	78	79	80
21				★		★		★	81	82	83	84
22				★		★	★		85	86	87	88
23				★		★	★	★	89	90	91	92
24				★	★				93	94	95	96
25				★	★			★	97	98	99	

2.Press **00001900** on the Outdoor Station to enter the **User Management**. Here is **Add User, Delete User**, and **Delete All User**.
User data information includes user room number, user name, and user card number. It can be input through the touch screen and press buttons. User names can support English and Arabic (only when the interface language is set to Arabic).
Adding users means adding list information such as user room number, user name, and user card number.
3.Press 00001901 to enter the language setting. Currently, 5 language settings are supported: **Simplified Chinese, Traditional Chinese, English, Arabic, French**.

5.Operations

4.After touching the **Call List** on the homepage, enter the name to query in the call list. Then select the corresponding room number, and confirm to call.

5.Card Management
Mode 1: Management Card mode (default mode). Add or delete user cards by using **Adding Card** or **Deleting Card**. Set this mode by pressing **00001700** then enter **01**.
Mode 2: Wiegand mode. Adding user cards and deleting user cards can be added or deleted in **Add User** and **Delete User** in **User Management**. Set this mode by press **00001700** and then enter **00**.

6.Public password setting: Press **00002000**, enter the 4-digit public password (enter 0000 to delete the public password) and a long beep indicates that the setting is successful.

7.Personal unlock password setting: call to your own indoor unit on the Outdoor Station, answer the phone after ringing, long press the **Unlock** button until the Outdoor Station displays "Enter Password". At this time, enter the 4-digit password on the Outdoor Station and it will automatically save the password. if you need to change your password, you only need to set it once.

For example, room number 201, call to 201. After answering the call, long press **Unlock** button until the Outdoor Station displays “Enter Password”. Then enter 4-digit password like 1234. To Unlock, press **02011234** on Outdoor Station.

8.System management password setting: No management password by default. Press **00002009**, enter a 6-digit password (**000000** to delete the administrator password), and a long beep will sound to indicate that the setting is successful.
Note: After setting the management password, you need to enter the management password each time you enter the settings. If the management password is 123456, and you need to change the public password, first press **123456** , then **00002000**, and then enter the new public password to complete the change.

9.**Forgotten Admin Password?**
a)Power off the device.
b)Short **SET** and **G** on the motherboard by jumper cap.
c)After **2 short beeps**, remove the jumper cap.
d)Wait for display to boot.
e)Enter **00002009+NEW_PASSWORD** (or **000000** to delete). A **long beep** confirms success.

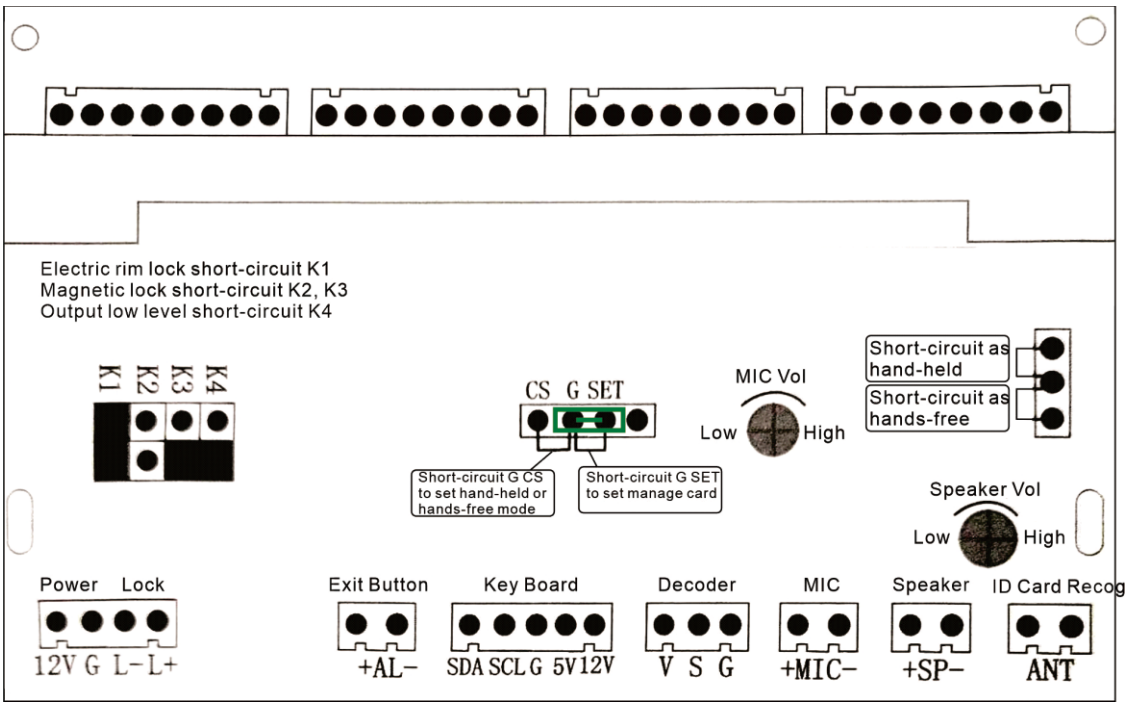

FAQ

Display ERR2: Indicates that the S line voltage is too high or the decoder has not decoded or the extension is not connected. Please check whether the line is connected correctly.

Display ERR4: Indicates that the S line voltage is too low or the main line is short-circuited or the decoder has decoded but the extension is not properly connected to the handle or the incoming line is short-circuited or the decoder address settings are the same. Please check the line and check whether the extension handle is properly connected.

Warranty Certificate

Customer name		Gender		Age	
Address					
Tel				Postcode	
Model No.		Order No.			
Dealer signature		User Signature			

Warranty Terms:

1. Replacement: Within 3 months of purchase, functional defects will result in same-model replacement if product and packaging remain intact.
2. Repair: Free repair services are provided for 1 year (excluding accessories or consumable parts).
3. Validity: Warranty applies only to products used under normal operating conditions.
4. Void Conditions:
   - Physical damage (e.g., housing removal, label tampering).
   - Misuse, accidents, or liquid exposure.
   - Loss of this warranty card.

Disclaimer

Contact for Support

For inquiries or disputes related to this manual, please contact our support team.

Documentation Updates

Device specifications and features are subject to change without prior notice due to continuous product development. To obtain the latest version of the manual in PDF format, please contact our support team.

Accuracy Notice

While every effort is made to ensure accuracy, discrepancies between the manual and actual device may exist. Refer to the device interface or packaging for current information.

CE FC RoHS